Marking features:
1- Type: Laser marking
2- Font: Manrope
3- Cone marking height: 50% of 'h' dimension

Section A-A

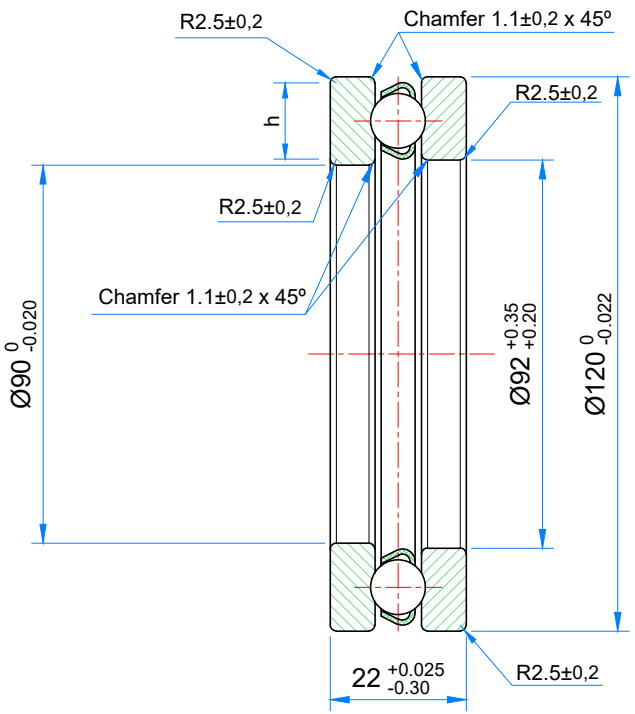

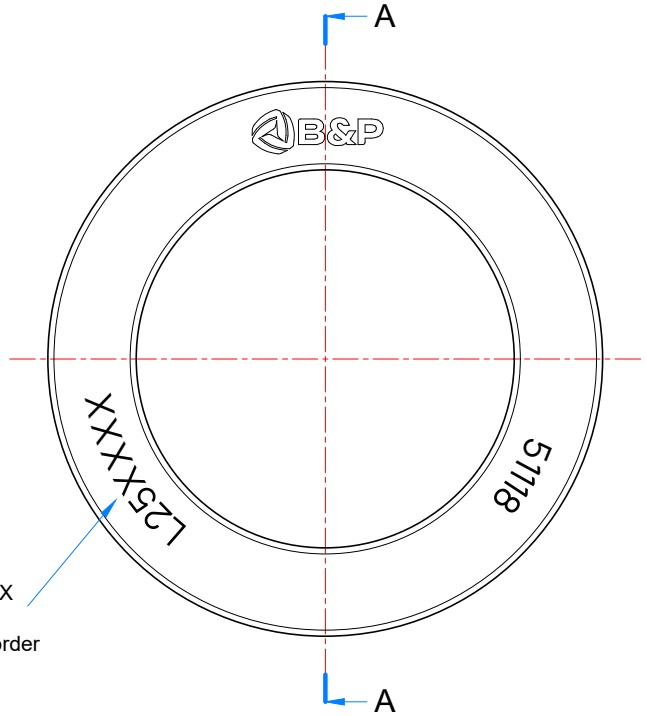

Replace the XXXX
with the number
of the purchase order

(TODAS LAS DIMENSIONES EN MILÍMETROS A MENOS QUE SE INDIQUE LO CONTRARIO)/(ALL DIMENSIONS ARE IN MILLIMETERS EXCEPT WHERE NOTED OTHERWISE)

Rev/Review	Descripción del cambio/Change Description	Dib/Made	Apr./Approval	Fecha/Date
A	Ball complement was changed	B.B	L.C	05/08/2022

NOTAS/NOTES:

Marking on bearing: " 51118 + B&P + L22XXXX " on face. Replace the XXXX with the number of the purchase order. Use Manrope font for code and tracking number. Use .dxf file for logo. A
Ball complement: 26 x Ø11.11 (7/16")
Rings and ball material: SAE 52100 - H.T (58 - 64 HRc)
Retainer: Crowned steel cage

Ca: 59.2 KN
Coa: 208 KN

Rust preventative oiled
Packaging: Plastic tube or roll wrapped

OBSERV/OBSERVATIONS

Tolerancias(salvo especificación)/
Tolerances(unless otherwise noted)

Sin decimal/Without Decimal	X.	±0.1
Un decimal/One Decimal	X.X	±0.05
Dos decimales/Two Decimal	X.XX	±0.02
Ángulos/Angles		±0.5°

PO#1291

B&P motionsolutions

51118

PLANO PRODUCCIÓN/FACTORY PRINT

Código/Code:		195-51118
	Fecha/Date	Nombre/Name
Dibujó/Made	20/07/2022	H.PIGLIACAMPI
Apr/Approved	20/07/2022	L.COCHIS
Rev/ReviewPO	29/05/2025	A.FARELEIRA
Escala/Scale:	NONE	
Mat/Material:	Ver NOTAS/see NOTES	
Trat. Térmico/ Heat treatment:	Ver NOTAS/see NOTES	
Rugosidad/ Roughness	Revisión/Review A	
Rev.rótulo/Review label B	Fecha/Date	14/02/2022